IOPscience iopscience.iop.org

Home Search Collections Journals About Contact us My IOPscience

Influence of the spin quantum number *s* on the zero-temperature phase transition in the square-lattice *J*–*J*′ model

This article has been downloaded from IOPscience. Please scroll down to see the full text article.

2005 J. Phys.: Condens. Matter 17 341

(http://iopscience.iop.org/0953-8984/17/2/009)

View the table of contents for this issue, or go to the journal homepage for more

Download details:
IP Address: 129.252.86.83
The article was downloaded on 27/05/2010 at 19:44

Please note that terms and conditions apply.

INSTITUTE OF PHYSICS PUBLISHING JOURNAL OF PHYSICS: CONDENSED MATTER

J. Phys.: Condens. Matter **17** (2005) 341–350 doi:10.1088/0953-8984/17/2/009

Influence of the spin quantum number s on the zero-temperature phase transition in the square-lattice J–J' model

R Darradi[1], J Richter[1] and D J J Farnell[2]

[1] Institut für Theoretische Physik, Otto-von-Guericke Universität Magdeburg, POB 4120, 39016 Magdeburg, Germany
[2] Unit of Ophthalmology, Department of Medicine, University Clinical Departments, Daulby Street, University of Liverpool, Liverpool L69 3GA, UK

Received 15 October 2004, in final form 15 October 2004
Published 20 December 2004
Online at stacks.iop.org/JPhysCM/17/341

Abstract
We investigate the phase diagram of the Heisenberg antiferromagnet on the square lattice with two different nearest-neighbour bonds J and J' (J–J' model) at zero temperature. The model exhibits a quantum phase transition at a critical value $J'_c > J$ between a semi-classically ordered Néel and a magnetically disordered quantum paramagnetic phase of valence-bond type, which is driven by local singlet formation on J' bonds. We study the influence of spin quantum number s on this phase transition by means of a variational mean-field approach, the coupled cluster method and the Lanczos exact-diagonalization technique. We present evidence that the critical value J'_c increases with growing s according to $J'_c \propto s(s+1)$.

1. Introduction

The study of quantum antiferromagnets in low-dimensional systems has attracted much attention in recent years, both theoretically and experimentally. In particular, quantum phase transitions are in the focus of interest; see e.g. [1–3]. For these zero-temperature transitions thermal fluctuations are irrelevant and the transition between different quantum phases (e.g. between magnetically ordered and disordered phases) is driven purely by quantum fluctuations. For the quantum spin Heisenberg antiferromagnet (HAFM) on two-dimensional lattices the interplay of interactions and fluctuations is well balanced and the existence of semi-classical magnetic long-range order depends on the degree of competition between bonds [4, 5]. Competition between bonds in spin systems may appear as frustration, which is present in classical as well as in quantum spin systems. In quantum systems a direct competition between bonds also exists which may lead to local singlet formation on certain antiferromagnetic bonds (or plaquettes of four spins) if these bonds are increased in strength. By tuning the degree of competition zero-temperature order–disorder phase transitions can be realized. The

existence of magnetically disordered quantum paramagnetic ground states in (quasi-)two-dimensional Heisenberg systems has been recently demonstrated, e.g. for $SrCu_2(BO_3)_2$ [6, 7] and CaV_4O_9 [8, 9].

A canonical model to study the competition in a frustrated quantum spin HAFM is the J_1–J_2 model on the square lattice, where the frustrating J_2 bonds plus quantum fluctuations lead to a second-order transition from Néel ordering to a quantum paramagnetic phase, see e.g. [10–15]. A widely studied model describing competition without frustration and showing the 'melting' of semi-classical Néel order by local singlet formation is the HAFM on the square lattice with two non-equivalent nearest-neighbour bonds J and J' (J–J' model) [16–23]. In these papers on the J–J' model the extreme quantum case $s = 1/2$ is considered and the competition can be tuned by variation of the exchange bond J'. One finds a second-order transition from the quasi-classically Néel ordered phase to a dimerized singlet phase at $J'_c \approx 2.5 \ldots 2.9J$. It is argued in [20, 21] that the quantum phase transition is of the same universality class as the thermal phase transition of three-dimensional classical Heisenberg model.

The strength of quantum fluctuations within this model can be varied either by anisotropy or by spin quantum number. Indeed its was found in [20] for the J–J' model that the critical J'_c for the XY model is significantly larger than for the spin rotationally invariant Heisenberg model. The influence of an Ising exchange anisotropy Δ_I leads also to an increase of J'_c which is in good approximation proportional to Δ_I [22]. The role of the spin quantum number s was not systematically studied. Some results for spin models with $s = 1$ can be found in, e.g., [21, 24].

In the present paper we study the ground state phase transition between a Néel ordered phase and a dimerized singlet phase of the J–J' model with spin quantum number $s = 1/2, 1, 3/2$ and 2 using a variational mean-field-like approach (MFA), the coupled cluster method (CCM) and exact diagonalization (ED) of finite systems.

2. Model

We consider the J–J' model on a square lattice, i.e. an HAFM with two kinds of antiferromagnetic nearest-neighbour bonds J and J' (see figure 1) described by the Hamiltonian

$$H = J \sum_{\langle ij \rangle_1} \mathbf{s}_i \cdot \mathbf{s}_j + J' \sum_{\langle ij \rangle_2} \mathbf{s}_i \cdot \mathbf{s}_j, \tag{1}$$

where the sums over $\langle ij \rangle_1$ and $\langle ij \rangle_2$ represent sums over the nearest-neighbour bonds, shown in figure 1 as dashed and solid lines, respectively. We consider spin operators $\mathbf{s}_i^2 = s(s+1)$ of spin quantum number $s = 1/2, 1, 3/2$ and 2.

Each square-lattice plaquette consists of three J bonds and one J' bond. In what follows we set $J = 1$ and consider $J' \geqslant 1$ as the parameter of the model. In the classical limit the ground state is the symmetry breaking Néel state. However, quantum fluctuations may lead to a rotationally invariant dimerized valence-bond state for large enough J'.

3. Variational mean-field-like approach

In this section we use the MFA to calculate the ground-state magnetic order parameter of the J–J' model (1). For the spin-half HAFM this approach has been successfully applied to bilayer systems [25], to the isotropic [2, 18] and anisotropic [22] J–J' model on the square lattice and on the 1/5 depleted square lattice for CaV_4O_9 [5], but also on the strongly frustrated HAFM

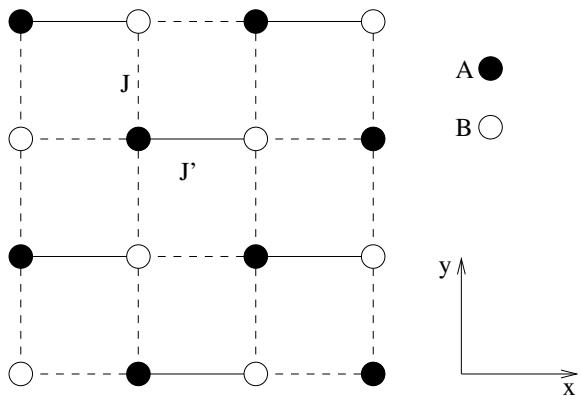

Figure 1. Illustration of arrangement of bonds in the J–J' model on the square lattice (equation (1)): J—dashed lines; J'—solid lines; A and B characterize the two sublattices of the classical Néel ground state.

on the star lattice [26]. In this paper we extend the basic ideas of this approach to higher spin quantum numbers $s = 1, 3/2$ and 2.

We start with the two uncorrelated mean-field-like states, namely the Néel state $|\phi_{\mathrm{MF}_1}\rangle = |+s\rangle|-s\rangle|+s\rangle|-s\rangle\ldots$ and the dimerized rotationally invariant singlet product state (valence-bond state) $|\phi_{\mathrm{MF}_2}\rangle = \prod_{\langle ij\rangle_2} |\{i, j\}_s\rangle$, where the product runs over all J' bonds; see (1). $|\{(i, j)\}_s\rangle$ in $|\phi_{\mathrm{MF}_2}\rangle$ is a singlet state of two spins s, i.e. we have $|\{i, j\}_{s=1/2}\rangle = \frac{1}{\sqrt{2}}[|+\frac{1}{2}\rangle|-\frac{1}{2}\rangle - |-\frac{1}{2}\rangle|+\frac{1}{2}\rangle$, $|\{i, j\}_{s=1}\rangle = \frac{1}{\sqrt{3}}[|+1\rangle|-1\rangle - |0\rangle|0\rangle + |-1\rangle|+1\rangle]$, $|\{i, j\}_{s=3/2}\rangle = \frac{1}{2}[|+\frac{3}{2}\rangle|-\frac{3}{2}\rangle - |+\frac{1}{2}\rangle|-\frac{1}{2}\rangle + |-\frac{1}{2}\rangle|+\frac{1}{2}\rangle - |-\frac{3}{2}\rangle|+\frac{3}{2}\rangle]$, $|\{i, j\}_{s=2}\rangle = \frac{1}{\sqrt{5}}[|+2\rangle|-2\rangle - |+1\rangle|-1\rangle + |0\rangle|0\rangle - |-1\rangle|+1\rangle + |-2\rangle|+2\rangle]$.

In order to describe the transition between both states we consider for the different spin quantum numbers respective uncorrelated product trial states of the form

$$|\Psi_{\mathrm{var}}^{s=1/2}\rangle = \prod_{\langle ij\rangle_2} \frac{1}{\sqrt{1+a^2}}\left[\left|+\frac{1}{2}\right\rangle\left|-\frac{1}{2}\right\rangle - a\left|-\frac{1}{2}\right\rangle\left|+\frac{1}{2}\right\rangle\right] \tag{2}$$

$$|\Psi_{\mathrm{var}}^{s=1}\rangle = \prod_{\langle ij\rangle_2} \frac{1}{\sqrt{1+b_1^2+b_2^2}}\big[|+1\rangle|-1\rangle - b_1|0\rangle|0\rangle + b_2|-1\rangle|+1\rangle\big] \tag{3}$$

$$\begin{aligned}|\Psi_{\mathrm{var}}^{s=3/2}\rangle = \prod_{\langle ij\rangle_2} \frac{1}{\sqrt{1+c_1^2+c_2^2+c_3^2}}\Bigg[&\left|+\frac{3}{2}\right\rangle\left|-\frac{3}{2}\right\rangle - c_1\left|+\frac{1}{2}\right\rangle\left|-\frac{1}{2}\right\rangle \\ &+ c_2\left|-\frac{1}{2}\right\rangle\left|+\frac{1}{2}\right\rangle - c_3\left|-\frac{3}{2}\right\rangle\left|+\frac{3}{2}\right\rangle\Bigg]\end{aligned} \tag{4}$$

$$\begin{aligned}|\Psi_{\mathrm{var}}^{s=2}\rangle = \prod_{\langle ij\rangle_2} \frac{1}{\sqrt{1+d_1^2+d_2^2+d_3^2+d_4^2}}\big[&|+2\rangle|-2\rangle - d_1|+1\rangle|-1\rangle \\ &+ d_2|0\rangle|0\rangle - d_3|-1\rangle|+1\rangle + d_4|-2\rangle|+2\rangle\big],\end{aligned} \tag{5}$$

where in the two-spin states $|n\rangle|m\rangle$ the first bra vector belongs to site i and the second to site j of a J' bond. The trial wavefunctions depend on the variational parameters a; b_1, b_2; c_1, c_2, c_3; d_1, d_2, d_3, d_4 and interpolate between the valence-bond state $|\phi_{\mathrm{MF}_2}\rangle$ realized for $a = 1$; $b_1 = b_2 = 1$; $c_1 = c_2 = c_3 = 1$; $d_1 = d_2 = d_3 = d_4 = 1$ and the Néel state $|\phi_{\mathrm{MF}_1}\rangle$ for $a = 0$; $b_1 = b_2 = 0$; $c_1 = c_2 = c_3 = 0$; $d_1 = d_2 = d_3 = d_4 = 0$, respectively. The ground-state

energy per site $e^s_{\rm var} = \langle\Psi^s_{\rm var}|H|\Psi^s_{\rm var}\rangle/N$ is calculated as

$$e^{s=1/2}_{\rm var}(a) = -\frac{J'}{2}\frac{a+\frac{1}{4}(1+a^2)}{1+a^2} - \frac{3}{2}\frac{(1-a^2)^2}{4(1+a^2)^2} \tag{6}$$

$$e^{s=1}_{\rm var}(b_1,b_2) = -\frac{J'}{2}\frac{2b_1+2b_1b_2+1+b_2^2}{1+b_1^2+b_2^2} - \frac{3}{2}\frac{(1-b_2^2)^2}{(1+b_1^2+b_2^2)^2} \tag{7}$$

$$\begin{aligned} e^{s=3/2}_{\rm var}(c_1,c_2,c_3) = &-\frac{J'}{2}\frac{3c_1+4c_1c_2+3c_2c_3+\frac{1}{4}(9+c_1^2+c_2^2+9c_3^2)}{1+c_1^2+c_2^2+c_3^2} \\ &- \frac{3}{2}\frac{(3+c_1^2-c_2^2-3c_3^2)^2}{4(1+c_1^2+c_2^2+c_3^2)^2} \end{aligned} \tag{8}$$

$$\begin{aligned} e^{s=2}_{\rm var}(d_1,d_2,d_3,d_4) = &-\frac{J'}{2}\frac{4d_1+6d_1d_2+6d_2d_3+4d_3d_4+d_1^2+4+d_3^2+4d_4^2}{1+d_1^2+d_2^2+d_3^2+d_4^2} \\ &- \frac{3}{2}\frac{(2+d_1^2-d_3^2-2d_4^2)^2}{(1+d_1^2+d_2^2+d_3^2+d_4^2)^2}. \end{aligned} \tag{9}$$

The relevant order parameter describing the Néel order is the sublattice magnetization $M = \langle\Psi^s_{\rm var}|s^z_{i\in A}|\Psi^s_{\rm var}\rangle$. Using equations (2)–(5) we obtain

$$M_{s=1/2}(a) = \frac{1-a^2}{2+2a^2} \tag{10}$$

$$M_{s=1}(b_1,b_2) = \frac{1-b_2^2}{1+b_1^2+b_2^2} \tag{11}$$

$$M_{s=3/2}(c_1,c_2,c_3) = \frac{3+c_1^2-c_2^2-3c_3^2}{2(1+c_1^2+c_2^2+c_3^2)} \tag{12}$$

$$M_{s=2}(d_1,d_2,d_3,d_4) = \frac{2+d_1^2-d_3^2-2d_4^2}{1+d_1^2+d_2^2+d_3^2+d_4^2}. \tag{13}$$

We minimize $E = \langle\Psi_{\rm var}|H|\Psi_{\rm var}\rangle$ with respect to the variational parameters. As a result we obtain an analytic expression for a in the case of $s = 1/2$, but a set of two, three and four coupled nonlinear equations for $s = 1, 3/2$ and 2 to determine the variational parameters. As reported in [18, 2] the sublattice magnetization for $s = 1/2$ is $M_{s=1/2}(J') = \frac{1}{2}\sqrt{1-(J'/3)^2}$ for $J' \leqslant 3$ but zero for $J' > 3$. Furthermore, one can express the ground-state energy as a Landau-type function of M, $e^{s=1/2}_{\rm var} = -\frac{3}{8}J' + \frac{1}{2}(J'-3)M^2 + \frac{1}{2}J'M^4$, indicating the molecular field-like nature of the approach. For $s = 1, 3/2$ and 2 we have to solve the corresponding set of nonlinear equations numerically. We show $M(J')$ in figure 2. $M(J')$ vanishes at a critical point $J'_{\rm c} = 3$ ($s = 1/2$), $J'_{\rm c} = 8$ ($s = 1$), $J'_{\rm c} = 15$ ($s = 3/2$) and $J'_{\rm c} = 24$ ($s = 2$), respectively. The corresponding critical index is the mean-field index 1/2.

The sequence of critical points for $s = 1/2, \ldots, 2$ is precisely described by $J_{\rm c}(s) = \frac{4}{3}s(s+1)(z-1)$, where $z = 4$ is the coordination number of the square lattice. Although we do not have results for $s > 2$, we argue that due to the systematic character of the MFA approach it seems likely that this expression is also valid for $s > 2$.

4. Coupled cluster method (CCM)

We now briefly describe the general CCM formalism; for further details the interested reader is referred to [27, 28, 30, 29]. In order to calculate the many-body ground state, we start with a normalized reference or model state $|\Phi\rangle$. We chose the Néel state as the reference state $|\Phi\rangle$

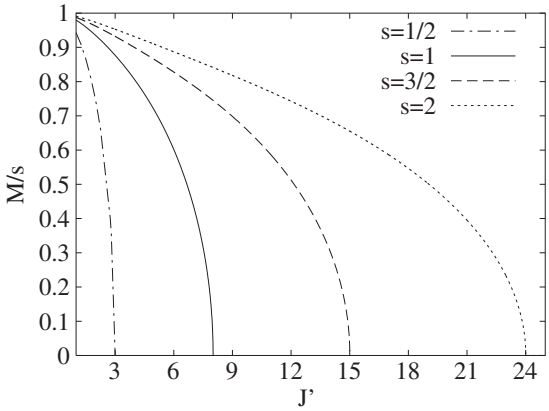

Figure 2. Sublattice magnetization M/s versus J' calculated by the variational mean-field-like approach (MFA), see text.

in order to treat the J–J' model using the CCM. It is convenient to perform a rotation of the local axis of the up spins such that all spins in the reference state align in the same direction, namely along the negative z-axis, such that we have $|\Phi\rangle = |-s\rangle|-s\rangle|-s\rangle|-s\rangle\cdots$. We define a set of multi-spin creation operators $C_I^+ = s_r^+, s_r^+ s_l^+, s_r^+ s_l^+ s_m^+, \ldots$. With this definition of the C_I^+ we have $\langle\Phi|C_I^+ = 0 = C_I|\Phi\rangle$, where C_I is the Hermitian adjoint of C_I^+. The CCM ket and bra ground states are then given by

$$|\Psi\rangle = \mathrm{e}^S|\Phi\rangle, \qquad S = \sum_{I\neq 0} \mathcal{S}_I C_I^+, \tag{14}$$

$$\langle\tilde{\Psi}| = \langle\Phi|\tilde{S}\mathrm{e}^{-S}, \qquad \tilde{S} = 1 + \sum_{I\neq 0} \tilde{\mathcal{S}}_I C_I. \tag{15}$$

The correlation operators S and $\tilde{S}$ contain the correlation coefficients $\mathcal{S}_I$ and $\tilde{\mathcal{S}}_I$ which have to be determined. Using the Schrödinger equation, $H|\Psi\rangle = E|\Psi\rangle$, we can now write the ground-state energy as $E = \langle\Phi|\mathrm{e}^{-S}H\mathrm{e}^S|\Phi\rangle$. The sublattice magnetization is given by $M = -\langle\tilde{\Psi}|s_i^z|\Psi\rangle$.

In order to determine the correlation coefficients $\mathcal{S}_I$ and $\tilde{\mathcal{S}}_I$, we require that the expectation value $\bar{H} = \langle\tilde{\Psi}|H|\Psi\rangle$ is a minimum with respect to $\mathcal{S}_I$ and $\tilde{\mathcal{S}}_I$. If we were able to take into account all possible multispin configurations in the correlation operators S and $\tilde{S}$ the CCM formalism would be exact. However, for the considered quantum spin model we have to use approximation schemes to truncate the expansion of S and $\tilde{S}$ in equations (14) and (15). As in [27–29], we use the SUBn–n approximation scheme, where we include only n spin flips in all configurations (or lattice animals in the language of graph theory) which span a range of no more than n adjacent lattice sites. Note that this approximation for $s = 1/2$ is equivalent to the LSUBn approximation [27–29]. Since the approximation becomes exact in the limit $n \to \infty$ it is useful to extrapolate the 'raw' CCM–SUBn–n results to the limit $n \to \infty$. Although an exact scaling theory for SUBn–n results is not known, there is empirical experience [18, 27–29] of how the order parameter for antiferromagnetic spin models scales with n. In accordance with those findings we use $M(n) = M(\infty) + a_1(1/n) + a_2(1/n)^2$ to extrapolate to $n \to \infty$. We note that we take a value of $M(\infty)$ tending to zero to indicate the critical point J_c' (see figure 3). The values for J_c' obtained by extrapolation of the SUBn–n results for M are, however, found to be slightly too large [18, 22]. Therefore, it is more favourable to consider the inflection points of the $M(J')$ curve for the SUBn–n approximation, assuming that the true $M(J')$ curve

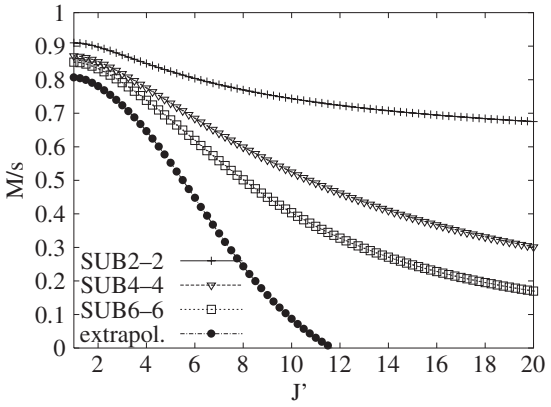

Figure 3. Sublattice magnetization M/s versus J' for spin quantum number $s = 1$ using the coupled cluster method (CCM); see the text.

will have a negative curvature up to the critical point. For increasing n the inflection point $J'_{\rm inf}$ approaches the critical point $J'_{\rm c}$. The inflection points for the SUBn–n approximation we can again extrapolate to the limit $n \to \infty$ using $J'_{\rm inf}(n) = J'_{\rm inf}(\infty) + b_1(1/n) + b_2(1/n)^2$ and interpret $J'_{\rm inf}(\infty)$ as the critical value $J'_{\rm c}$.

In principle it is possible to apply the CCM for arbitrary spin quantum number s. However, within the used SUBn–n approximation scheme for higher s additional problems appear, namely

(i) the number of fundamental configurations (lattice animals) $N_{\rm F}$ increases with s, which makes the calculations on a certain level of approximation n more ambitious, and
(ii) the total number of basis states grows drastically with s according to s^N and as a consequence the SUBn–n approximation may become less reliable.

While the latter point is irrelevant for systems where the quantum ground state is close to the reference state (i.e. in our model in the case of well pronounced Néel order) it becomes relevant if the quantum ground state is far from the reference state (i.e. in our model when Néel order breaks down). Hence the results for higher spin quantum numbers must be taken with extra care.

We have calculated CCM results within the SUBn–n approximation for $n = 2, 4$ and 6 for $s = 1/2, 1, 3/2, 2$. For spin 1/2 results for $n = 8$ are also available (see [18, 22]). First we report the values for $J'_{\rm c}$ for spin $s = 1/2$ (see also [18, 22]). The extrapolation of the SUBn–n data for M with $n = 2, 4$ and 6 as described above leads to $J'_{\rm c} \approx 3.5$. However, as discussed above the extrapolation of the order parameter tends to overestimate $J'_{\rm c}$ (note that $J'_{\rm c}$ obtained this way is even larger than the value found within the MFA) and the extrapolation of the inflection point is favourable. We found as inflection points of the $M_s(J')$ curves $J'_{\rm inf}(n) = 3.60$ (SUB2–2), 3.33 (SUB4–4) and 3.13 (SUB6–6), leading to an extrapolated value of $J'_{\rm c} = J'_{\rm inf}(\infty) = 2.56$. We mention that the consideration of SUB8–8 data leads to a slight modification of $J'_{\rm c}$ to $J'_{\rm c} = J'_{\rm inf}(\infty) = 2.54$, only.

We now consider the case $s = 1$, where the results for the order parameter M are given in figure 3. Clearly we see the weakening of the magnetic order on increasing J'. The extrapolation of the SUBn–n data for M with $n = 2, 4$ and 6 leads to $J'_{\rm c} \approx 11.7$, i.e. we get the same tendency as for the variational MFA, that $J'_{\rm c}$ increases with s. Again the extrapolation of the order parameter leads to an overestimation of $J'_{\rm c}$. This overestimation is connected with

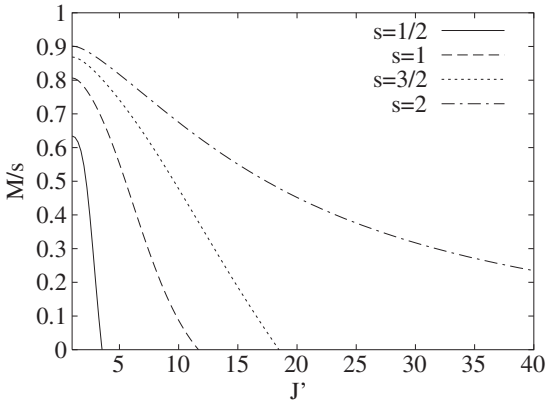

Figure 4. Extrapolated sublattice magnetization M/s versus J' for various spin quantum numbers s using the coupled cluster method (CCM); see the text.

the change in the sign of curvature of $M(J')$ seen in figure 3. The favourable extrapolation of the inflection points leads to $J'_c = J'_{inf}(\infty) \approx 6.4$, where the inflection points for the different levels of SUBn–n approximations are $J'_{inf}(n = 2) = 3.93$, $J'_{inf}(n = 4) = 6.04$ and $J'_{inf}(n = 6) = 6.36$.

Finally, we consider spin $s = 3/2$ and 2. The results for the extrapolated sublattice magnetization for spin values $s = 1/2, 1, 3/2$ and 2 using the SUBn–n approximation for $n = 2, 4$ and 6 are shown in figure 4. Evidently, the sublattice magnetization M/s increases with s, demonstrating the decreasing influence of quantum fluctuations with growing spin quantum number. The critical value for $s = 3/2$ is obtained as $J'_c \approx 18.5$ which is again too large in comparison to the MFA result. The extrapolation of the inflection points leads to $J'_c \approx 10.9$. Note that we have calculated M using the CCM up to $J' = 100$ for $s = 2$. However, we were unable to find a vanishing M (i.e., the critical value J'_c obtained by extrapolation of the order parameter would be larger than 100). Results for the point of inflection of M were similarly contradictory, and so the results for the position of the phase transition point predicted by the CCM for $s = 2$ are not included here.

We conclude that the CCM SUBn–n approximation is inappropriate to describe the quantum phase transition correctly for higher spin values (namely, $s > 3/2$) at the levels of approximation currently available for present-day computers. However, we do observe that the tendency for critical value J'_c to increase with growing s is observed using the CCM for $s \leqslant 3/2$, as expected. This problem of reliability might be resolved by going to higher orders of truncation index m, although we note that the computational problem is very difficult (e.g., with $N_F = 108\,033$ for SUB8–8 for $s = 3/2$) and so this is not considered here. We note that LSUBn calculations do not place a restriction on the total number of spin flips used in the CCM correlation operators, although the fundamental clusters are restricted to remain within a locale defined by n. However, this again leads to an extremely large number of fundamental clusters even for low values of n and for higher spin quantum numbers, and so LSUBn is not considered here. Mean-field model states (e.g. based on the variational states in section 3) might also provide enhanced results for the CCM.

As a byproduct we also present in table 1 the results for the sublattice magnetization M/s for higher spin values for the pure square lattices ($J' = 1$), which are so far not calculated within CCM. We point out that for the pure square lattice the results for M are expected to be quite reliable, since the true quantum ground state is close to the reference state used as the

Table 1. CCM results for the ground state of the Heisenberg antiferromagnet on the square lattice with spin quantum number $s = 3/2$ and 2 using the SUBn–n approximation with $n = \{2, 4, 6\}$. Note that N_F indicates the number of fundamental clusters at each level of approximation. For comparison we present the results of the second-order spin wave theory (SWT) [31].

	$s = 3/2$			$s = 2$		
	N_F	E_g/N	M/s	N_F	E_g/N	M/s
SUB2–2	1	−4.943 927	0.936 174	1	−8.593 510	0.950 368
SUB4–4	15	−4.976 427	0.910 266	15	−8.633 108	0.931 09
SUB6–6	461	−4.982 685	0.898 16	461	−8.640 356	0.922 284
SUB∞	—	−4.987 8	0.868 7	—	−8.646 1	0.901 1
SWT	—	−4.986 2	0.869 2	—	−8.644 2	0.901 8

starting point. This is indeed confirmed by comparison with high precision second-order spin wave results [31] also presented in table 1. We mention that due to the reduced symmetry the number of fundamental configurations N_F increases in the case of $J' \neq J$. For SUB6–6 we find $N_F = 267$, 1420, 1744 and 1744 for $s = 1/2$, 1, 3/2 and 2, respectively. Note that N_F for $s = 3/2$ and 2 is equal only up to SUB6–6 but differs for higher levels of approximation. For completeness we also give the sublattice magnetization for $s = 1/2$, $M/s = 0.63$ (note that this value can be improved by also considering SUB8–8 for the extrapolation, which yields $M/s = 0.62$ [28]), and for $s = 1$, $M = 0.81$ (see also [30]).

5. Exact diagonalization (ED)

In addition to the MFA and the CCM we use the exact diagonalization Lanczos technique to calculate the order parameter for finite square lattices with periodical boundary conditions. The calculations are performed using *spinpack* [32]. As usual for ED (see e.g. [5]) we calculate the square of the sublattice magnetization M^2 defined by $M^2 = \langle [\frac{1}{N}\sum_{i=1}^{N} \tau_i \mathbf{s}_i]^2 \rangle$ with the staggered factor $\tau_{i\in A} = +1$, $\tau_{i\in B} = -1$. For the finite-size scaling of M^2 we use the standard three-parameter formula [33, 34, 5] $M^2(N) = M^2(\infty) + c_1 N^{-1/2} + c_2 N^{-1}$. The critical value J'_c is that point where $M^2(\infty)$ vanishes. Again we are faced with the problem that the method becomes less reliable for larger quantum numbers s. While for $s = 1/2$ one can calculate the GS for the J–J' model up to $N = 32$ [18, 20, 22] sites, one is restricted to lattices of up to $N = 20$ for $s = 1$, up to $N = 16$ for $s = 3/2$ and up to $N = 10$ for $s = 3/2$. Since for $s = 2$ we have only two lattices ($N = 10$ and 8) with the full lattice symmetry, we do not consider $s = 2$ within ED. To treat all three cases in a consistent way we consider only $N = 8, 10$ and 16 for $s = 1/2$, 1 and 3/2. It is clear that the resulting finite-size extrapolation remains quite poor and only allows some qualitative conclusions. We present for illustration the results for the order parameter M for $s = 1$ in figure 5. The critical values obtained by finite size extrapolation of M are $J'_c \approx 2.2$ for $s = 1/2$, $J'_c \approx 5.5$ for $s = 1$ and $J'_c \approx 10.1$ for $s = 3/2$. These data confirm the tendency found by MFA and CCM that the increase of J'_c with s is stronger than linear.

6. Summary and discussion

We have investigated the ground-state magnetic order parameter for the square-lattice isotropic Heisenberg antiferromagnet with two kinds of nearest-neighbour exchange bonds (J–J' model) by using a variational mean-field approach (MFA), the coupled cluster method (CCM) and exact diagonalizations (ED). In particular, we have studied the influence of the spin quantum number

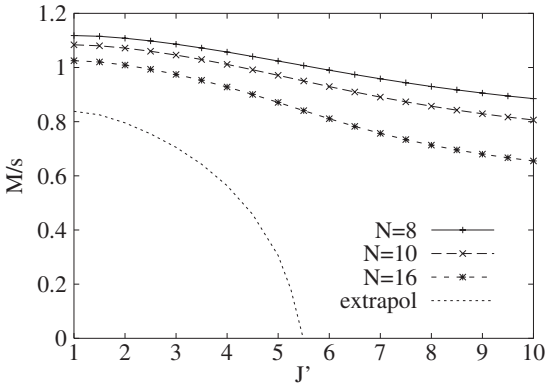

Figure 5. Sublattice magnetization M/s versus J' for spin quantum number $s = 1$ using exact diagonalization of finite lattices of $N = 8$, 10 and 16; see the text.

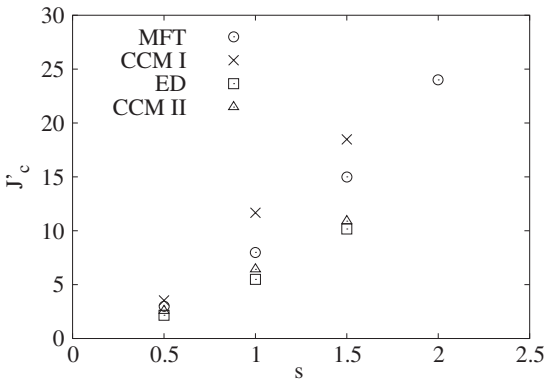

Figure 6. The critical value J'_c versus spin quantum number s obtained by different methods. MFA, variational mean-field approach (see section 3); CCM I, coupled cluster method (extrapolation of the order parameter, see section 4); CCM II, coupled cluster method (extrapolation of the inflection point; see section 4); ED, exact diagonalization (see section 5).

s on the quantum critical point J'_c. Our results for J'_c are presented in figure 6, and we note that a transition from a semi-classically Néel ordered phase to a magnetically disordered phase occurs at this point. Obviously, there is an increase of J'_c with s signalling the diminishing of quantum effects. We have presented evidence that the critical value J'_c increases with growing s according to $J'_c \propto s(s+1)$.

Acknowledgments

We thank the DFG for financial support (project Ri 614/14-1). The authors are indebted to J Schulenburg for assistance in numerical calculations.

References

[1] Sachdev S 1999 *Quantum Phase Transitions* (Cambridge: Cambridge University Press)

[2] Richter J, Krüger S, Farnell D and Bishop R 2001 *Quantum Phase Transitions in Spin Systems* (*Series on Advances in Quantum Many-Body Theory* vol 5) ed R F Bishop, K A Gernoth and N R Walet (Singapore: World Scientific) pp 239–46

[3] Sachdev S 2004 Quantum phases and phase transitions of Mott insulators *Quantum Magnetism* (*Springer Lecture Notes in Physics* vol 645) ed U Schollwöck, J Richter, D J J Farnell and R F Bishop (Berlin: Springer) pp 381–431
[4] Misguich G and Lhuillier C 2003 Two-dimensional quantum antiferromagnets *Preprint* cond-mat/0310405
[5] Richter J, Schulenburg J and Honecker A 2004 Quantum magnetism in two dimensions: from semi-classical Néel order to magnetic disorder *Quantum Magnetism* (*Springer Lecture Notes in Physics* vol 645) ed U Schollwöck, J Richter, D J J Farnell and R F Bishop (Berlin: Springer) pp 85–153 (http://www.tu-bs.de/~honecker/papers/2dqm.ps.gz)
[6] Taniguchi S, Nishikawa T, Yasui Y, Kobayashi Y, Sato M, Nishioka T, Kontani M and Sano K 1995 *J. Phys. Soc. Japan* **64** 2758
[7] Troyer M, Kontani H and Ueda K 1996 *Phys. Rev. Lett.* **76** 3822
[8] Kageyama H, Yoshimura K, Stern R, Mushnikov N V, Onizuka K, Kato M, Kosuge K, Slichter C P, Goto T and Ueda Y 1999 *Phys. Rev. Lett.* **82** 3168
[9] Koga A and Kawakami N 2000 *Phys. Rev. Lett.* **84** 4461
[10] Chandra P and Doucot B 1988 *Phys. Rev.* B **38** 9335
[11] Richter J 1993 *Phys. Rev.* B **47** 5794
[12] Oitmaa J and Zheng W 1996 *Phys. Rev.* B **54** 3022
[13] Bishop R F, Farnell D J J and Parkinson J B 1998 *Phys. Rev.* B **58** 6394
[14] Ivanov N B, Richter J and Farnell D J J 2002 *Phys. Rev.* B **66** 014421
[15] Capriotti L and Sorella S 2000 *Phys. Rev. Lett.* **84** 3173
[16] Singh R R P, Gelfand M P and Huse D A 1988 *Phys. Rev. Lett.* **61** 2484
[17] Ivanov N B, Krüger S E and Richter J 1996 *Phys. Rev.* B **53** 2633
[18] Krüger S E, Richter J, Schulenburg J, Farnell D J J and Bishop R F 2000 *Phys. Rev.* B **61** 14607
[19] Krüger S E and Richter J 2001 *Phys. Rev.* B **64** 024433
[20] Tomczak P and Richter J 2001 *J. Phys. A: Math. Gen.* **34** L461
[21] Matsumoto M, Yasuda C, Todo S and Takayama H 2001 *Phys. Rev.* B **66** 014407
[22] Darradi R, Richter J and Krüger S E 2004 *J. Phys.: Condens. Matter* **16** 2681
[23] Yoshioka D, Arakawa G, Ichinose I and Matsui T 2004 *Phys. Rev.* B **70** 174407
[24] Matsumoto M, Todo S, Yasuda C and Takayama H 2003 *Preprint* cond-mat/0310619
[25] Gros C, Wenzel W and Richter J 1995 *Europhys. Lett.* **32** 747
[26] Richter J, Schulenburg J, Honecker A and Schmalfuß D 2004 *Phys. Rev.* B **70** 174454
[27] Zeng C, Farnell D J J and Bishop R F 1998 *J. Stat. Phys.* **90** 327
[28] Bishop R F, Farnell D J J, Krüger S E, Parkinson J B, Richter J and Zeng C 2000 *J. Phys.: Condens. Matter* **12** 6877
[29] Farnell D J J, Bishop R F and Gernoth K A 2002 *J. Stat. Phys.* **108** 401
[30] Farnell D J J, Gernoth K A and Bishop R F 2001 *Phys. Rev.* B **64** 172409
[31] Hamer C J, Zheng W H and Arndt P 1992 *Phys. Rev.* B **46** 6276
[32] Schulenburg J, Spinpack homepage: http://www-e.uni-magdeburg.de/jschulen/spin/
[33] Neuberger H and Ziman T 1989 *Phys. Rev.* B **39** 2608
[34] Hasenfratz P and Niedermayer F 1993 *Z. Phys.* B **92** 91